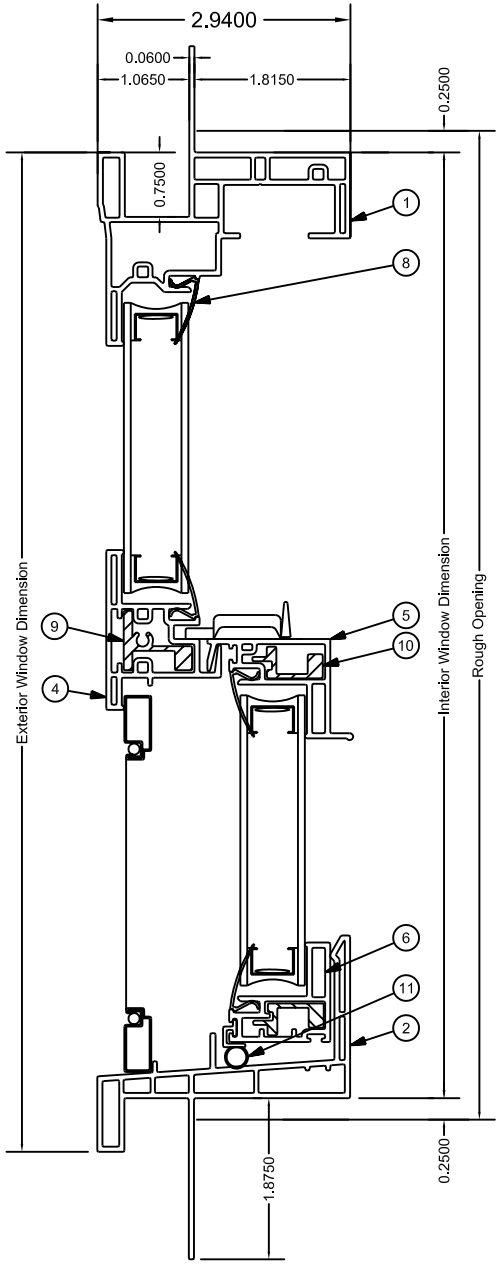

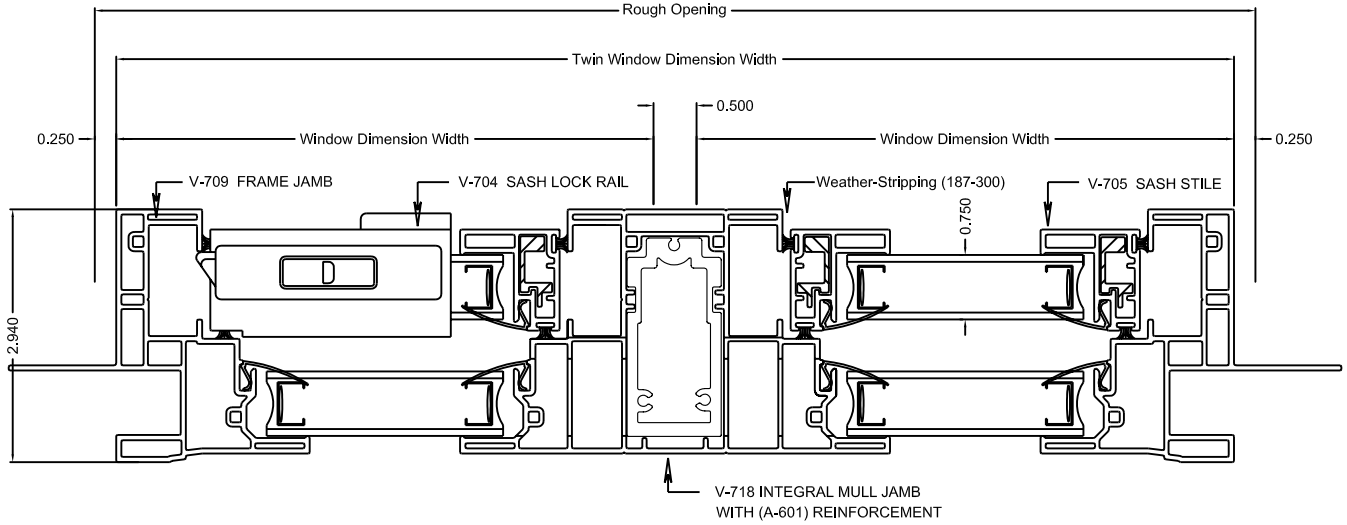

1	V-709 FRAME HEAD	7	V-705 SASH STILE
2	V-707 FRAME SILL	8	V-716 GLAZING BEAD
3	V-709 FRAME JAMB	9	S-046 M.R. REINFORCEMENT
4	V-706 MEETING RAIL	10	S-047 SASH REINFORCEMENT
5	V-704 SASH LOCK RAIL	11	V-388 BULB SEAL
6	V-705 SASH BOTTOM RAIL	12	V-715 SASH STOP

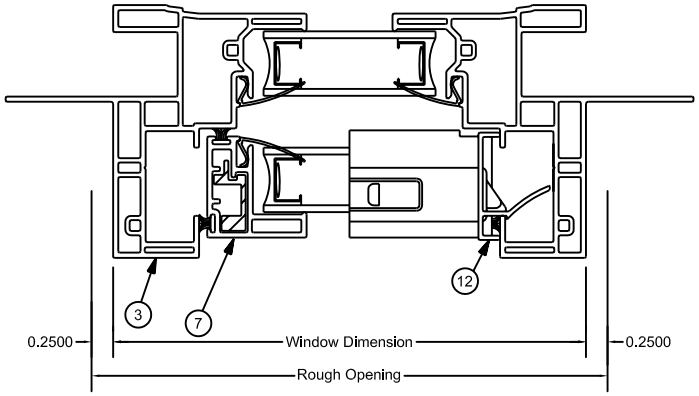

MGM
INDUSTRIES
287 Freehill Road
Hendersonville, TN 37075
1-800-476-5584

TITLE:	Vertical and Horizontal Cross-Section
MATERIALS:	Series #6060 Single-Hung
DATE: 07-10-06	SCALE: DO NOT SCALE
BY: RGraves	DWG NO: 1 Page